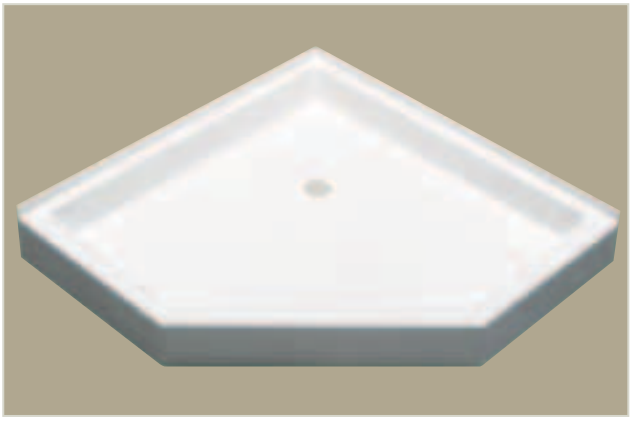

Neo Angle Model

One piece, molded receptor with center door opening for corner installation. 1" flange on two sides.

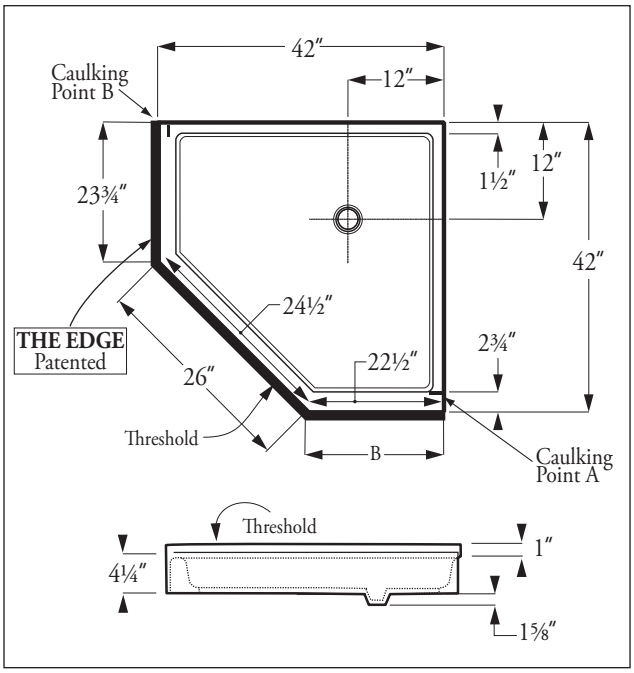

Model	Weight
42F NEO	48

Dimensions subject to change without notice.

Contact Florestone Products to verify product specifications.

Standards:

I.A.P.M.O.	International Association of Plumbing and Mechanical Officials File No. 0687.
ANSI	American National Standards Institute - Specifications Z-124.2.
HUD/FHA	National Specifications UN-73.

Molded Fiberglass Model 42F Neo Neo Shower Receptor

Architect's Specifications

Furnish and install Model 42F Neo Shower Receptor manufactured by Florestone Products Co. The receptor shall be furnished with slip-resistant design that does not interfere with the flow of water nor trap it. Receptor to have not less than 1" flange on two sides. Receptor to be stain, and fungus resistant. Color to be white (unless other specified) and will be resistant to fading and abrasion. Model shall conform to ANSI-Z-124.2.

SAFLOR® Options and Accessories

Standard: White, Bone, Biscuit

Special: Granite (see pg. 12)

Strainer, Brass

Strainer, Chrome

Strainer, Plastic

Repair Kit

Dimensions may vary ± ¼″ inch.
Please check unit before installation.

Place receptor on a minimum ¼″ bed of mortar or plaster for warranty compliance.

FLORESTONE
A Spec Above.™

FLORESTONE PRODUCTS CO., INC.

2851 Falcon Drive • Madera, CA 93637

T. 559.661.4171 • T. 800.446.8827

F. 559.661.2070 • florestone.com

Model 42F Neo Angle Molded Fiberglass Shower Receptor